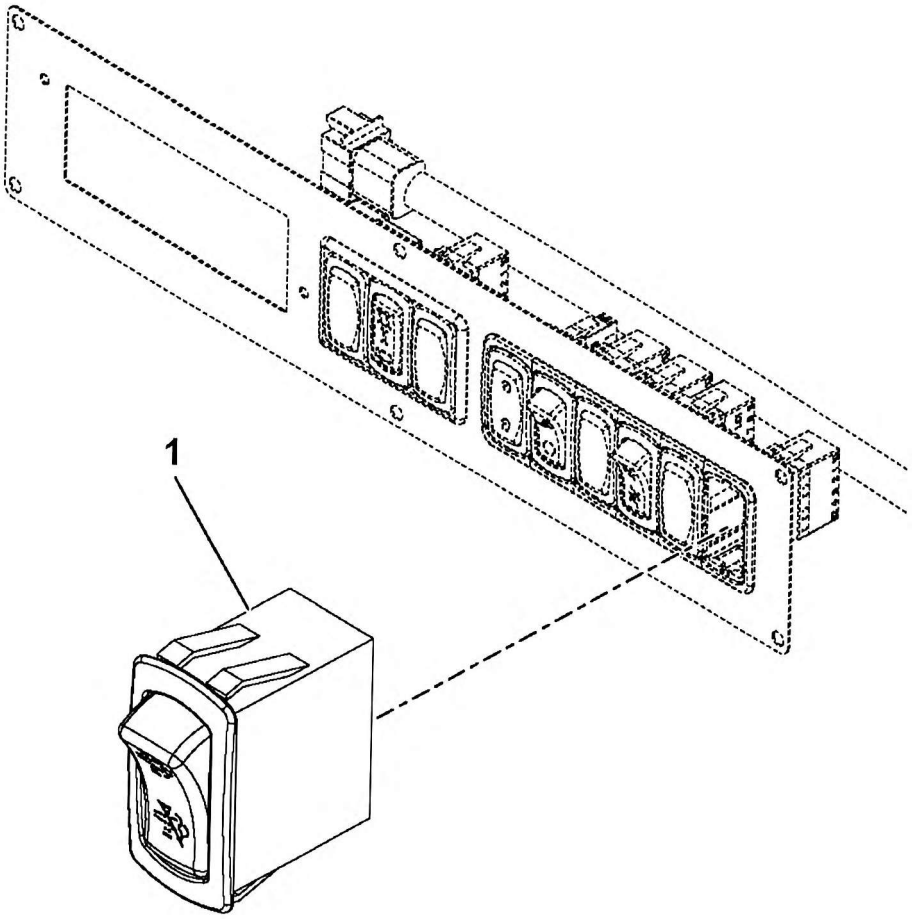

80028067

(SHEET 1 OF 1)